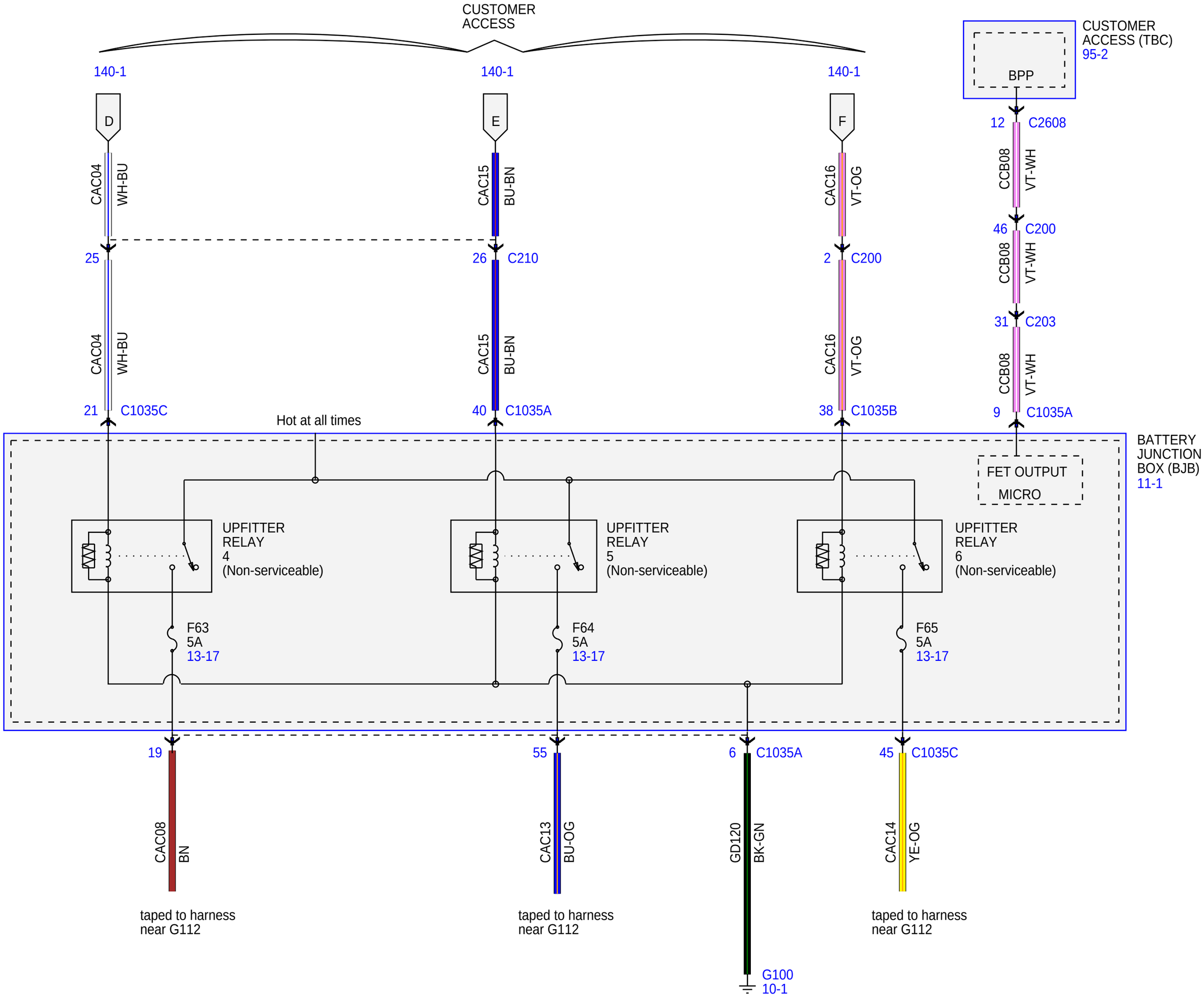
CUSTOMER ACCESS
140-1
140-1
140-1
D
E
F
CAC04
WH-BU
CAC15
BU-BN
CAC16
VT-OG
25
26
C210
2
C200
CAC04
WH-BU
CAC15
BU-BN
CAC16
VT-OG
21
C1035C
40
C1035A
38
C1035B
Hot at all times
CUSTOMER ACCESS (TBC)
95-2
BPP
12
C2608
CCB08
VT-WH
46
C200
CCB08
VT-WH
31
C203
CCB08
VT-WH
9
C1035A
BATTERY JUNCTION BOX (BJB)
11-1
FET OUTPUT MICRO
UPFITTER RELAY 4 (Non-serviceable)
UPFITTER RELAY 5 (Non-serviceable)
UPFITTER RELAY 6 (Non-serviceable)
F63
5A
13-17
F64
5A
13-17
F65
5A
13-17
19
55
6
C1035A
45
C1035C
CAC08
BN
CAC13
BU-OG
GD120
BK-GN
CAC14
YE-OG
taped to harness near G112
taped to harness near G112
taped to harness near G112
G100
10-1