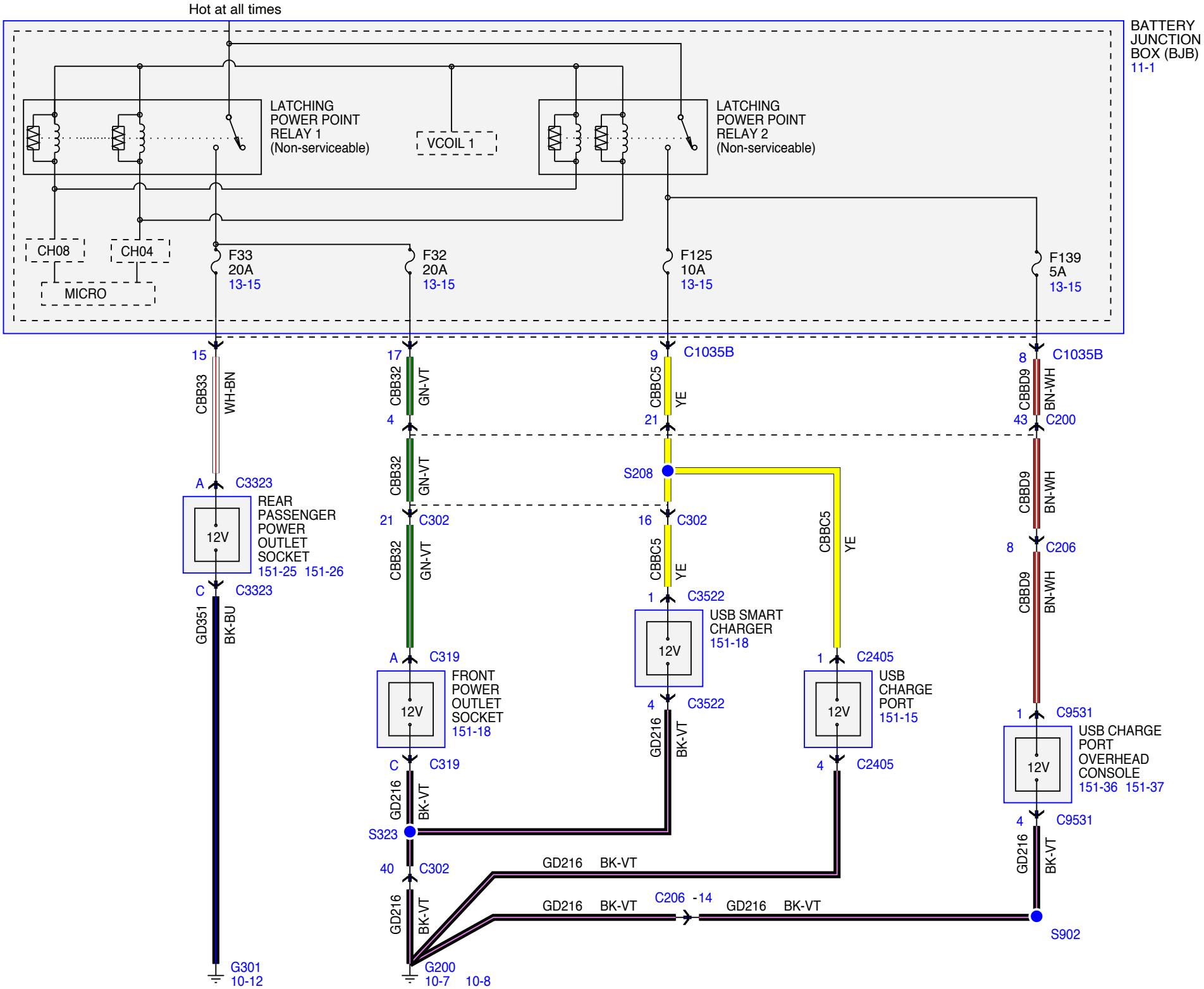
Hot at all times
BATTERY JUNCTION BOX (BJB)
11-1
LATCHING POWER POINT RELAY 1 (Non-serviceable)
VCOIL 1
LATCHING POWER POINT RELAY 2 (Non-serviceable)
CH08
CH04
MICRO
F33 20A 13-15
F32 20A 13-15
F125 10A 13-15
F139 5A 13-15
15
CBB33
WH-BN
A C3323
REAR PASSENGER POWER OUTLET SOCKET
151-25 151-26
12V
C C3323
GD351
BK-BU
G301
10-12
17
CBB32
GN-VT
4
21 C302
A C319
FRONT POWER OUTLET SOCKET
151-18
C C319
GD216
BK-VT
S323
40 C302
G200
10-7 10-8
9 C1035B
CBBC5
YE
21
S208
16 C302
1 C3522
USB SMART CHARGER
151-18
4 C3522
1 C2405
USB CHARGE PORT
151-15
4 C2405
GD216 BK-VT
C206 -14
S902
8 C1035B
CBBD9
BN-WH
43 C200
8 C206
1 C9531
USB CHARGE PORT OVERHEAD CONSOLE
151-36 151-37
4 C9531