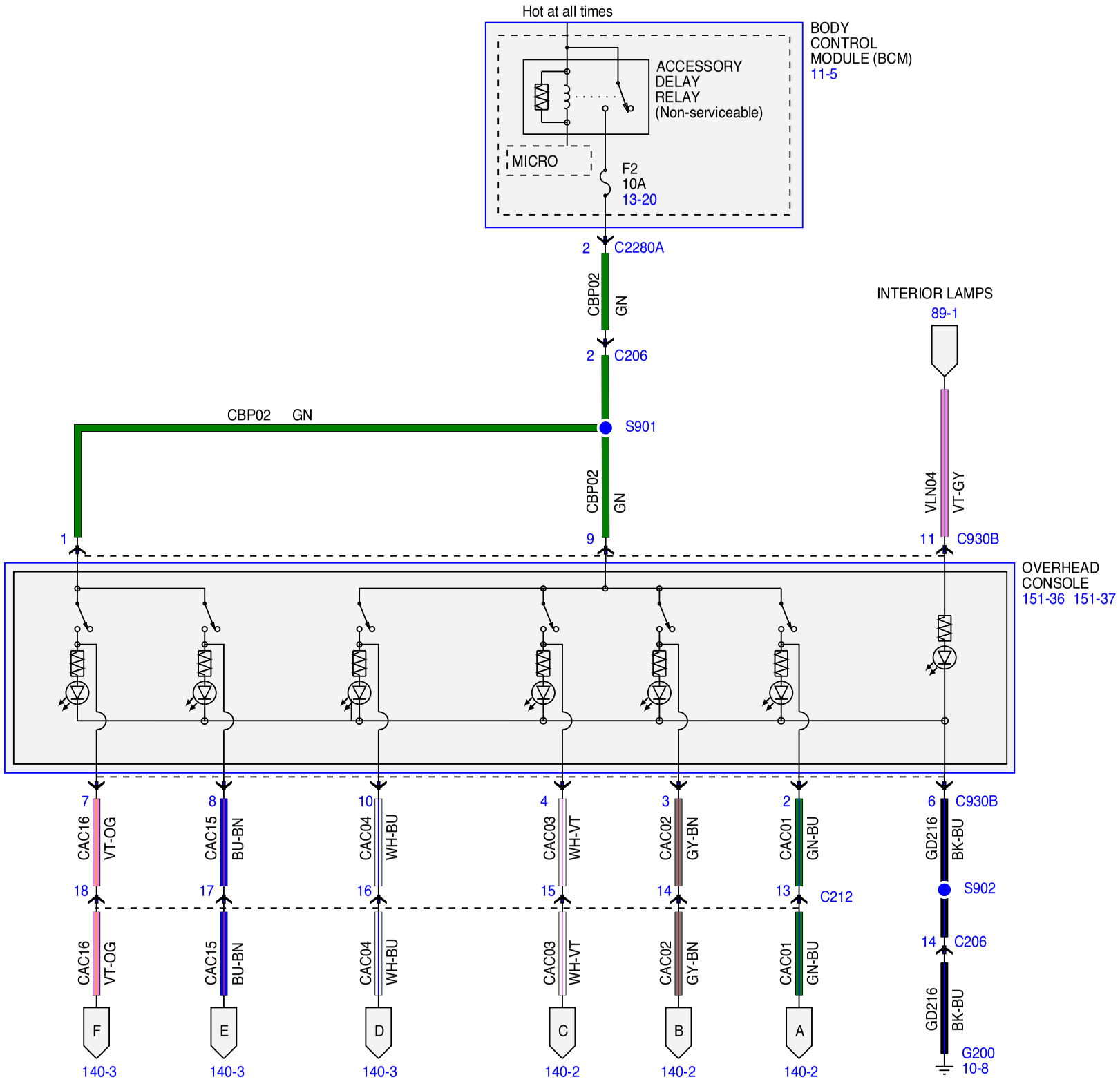
Hot at all times
BODY CONTROL MODULE (BCM)
11-5
ACCESSORY DELAY RELAY (Non-serviceable)
MICRO
F2
10A
13-20
2
C2280A
CBP02
GN
2
C206
INTERIOR LAMPS
89-1
CBP02 GN
S901
CBP02
GN
VLN04
VT-GY
1
9
11
C930B
OVERHEAD CONSOLE
151-36 151-37
7
CAC16
VT-OG
8
CAC15
BU-BN
10
CAC04
WH-BU
4
CAC03
WH-VT
3
CAC02
GY-BN
2
CAC01
GN-BU
6
C930B
GD216
BK-BU
18
17
16
15
14
13
C212
S902
14
C206
CAC16
VT-OG
CAC15
BU-BN
CAC04
WH-BU
CAC03
WH-VT
CAC02
GY-BN
CAC01
GN-BU
GD216
BK-BU
F
E
D
C
B
A
G200
10-8
140-3
140-3
140-3
140-2
140-2
140-2