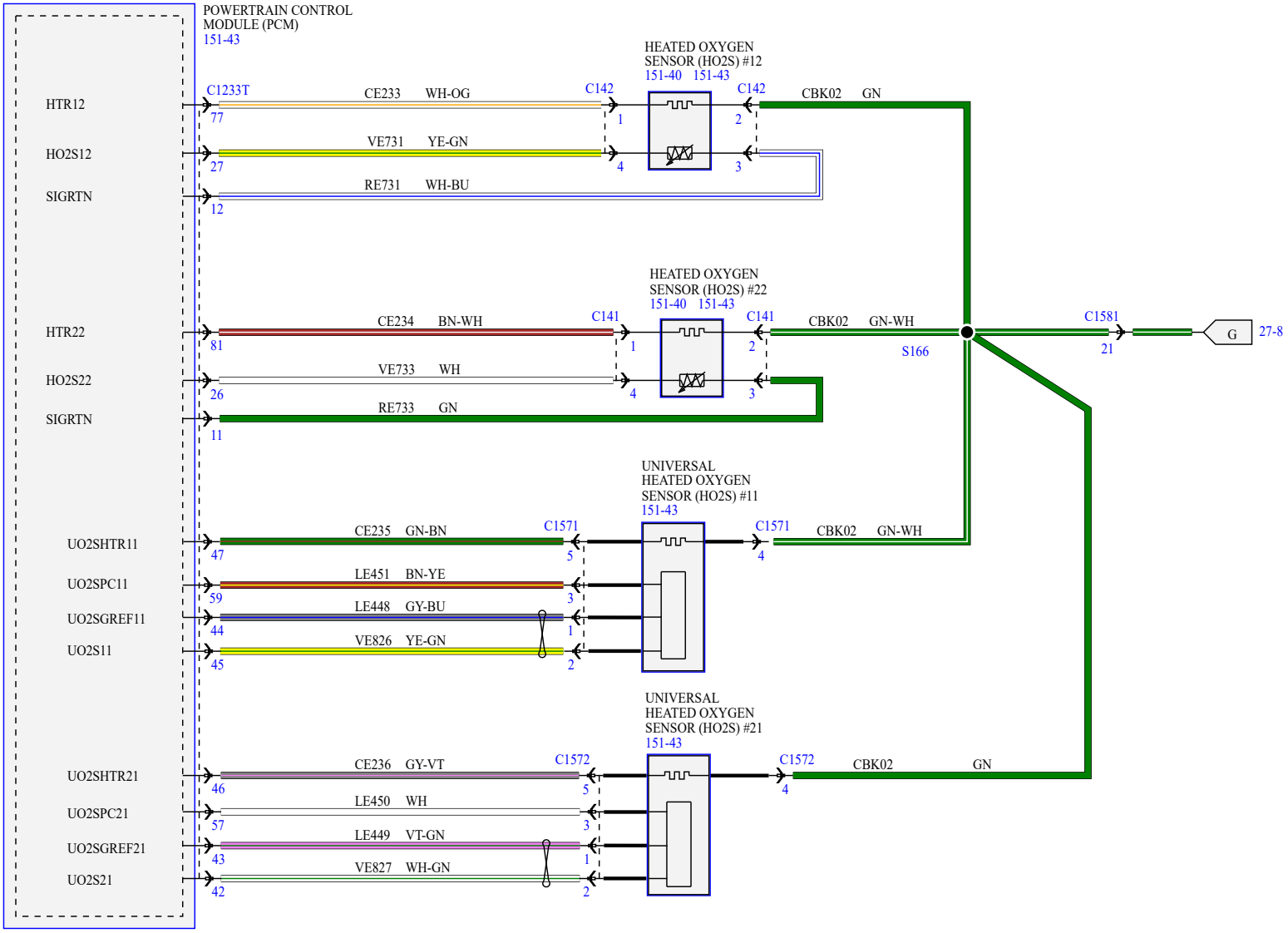10R80 TRANSMISSION