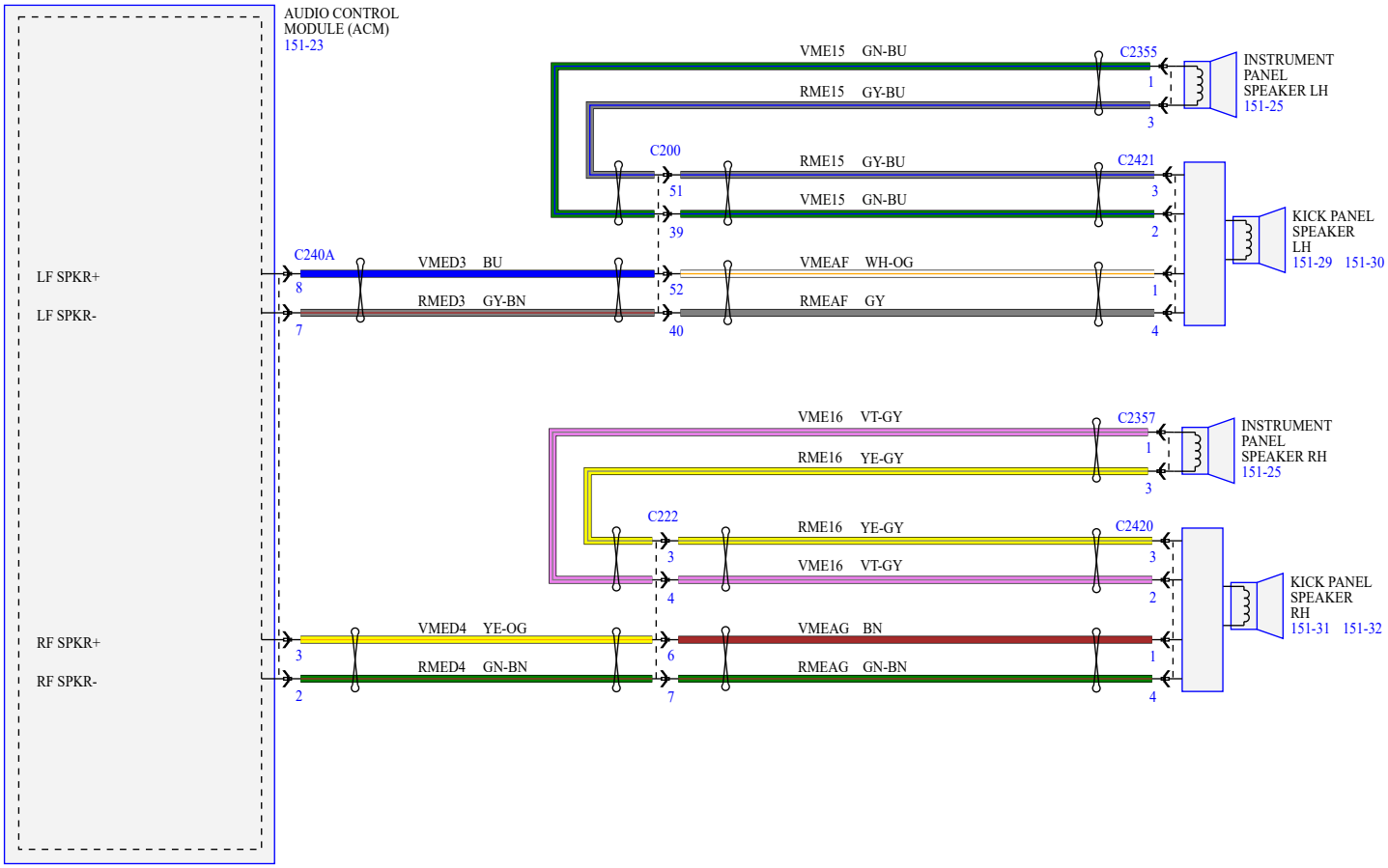12 SPEAKER SYSTEM