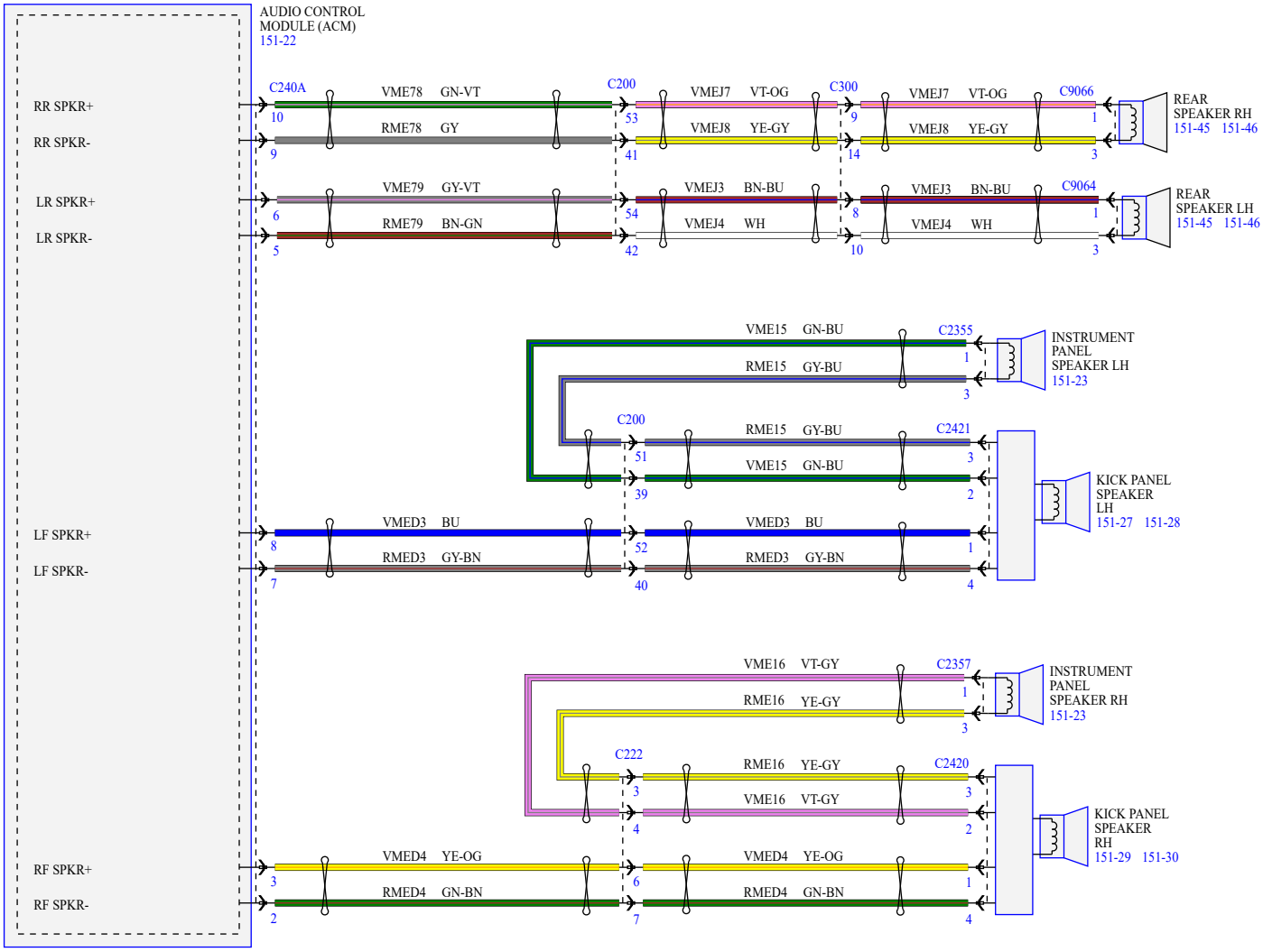6 OR 7 SPEAKER SYSTEM